Pre - Load Heavy Hex Bolt ASTM

ASTM Heavy Hex Bolt (A325M (F3125M) & ASTM A490 M)

F3125MBolt

Standard Specification	**A325M B18.2.3.7M**
Material	**Medium Carbon Steel**
Strength	**8.8**
Screw Thread	**ASME B1.13M MC 6g**
Surface Finish	**Plain as Processed**
	Hot Dip Galvanized

A490M Bolt

Standard Specification	**A490M B18.2.3.7M**
Material	**Alloy Steel**
Strength	**10.9**
Screw Thread	**ASME B1.13. 6G**
Surface Finish	**Plain as Processed**

A325M Bolt Characteristics

Nominal Bolt Dia & Thread Pitch	Stress Area, mm^2	Proof Load, kn: Length Measurement Method,	Proof Load, kn: Yeild Strength Method,	Tensile Strength min, kN	Hardness: Rockwell min	Hardness: Rockwell max	Hardness: Vickers min	Hardness: Vickers max
M16x2	157	94.2	104	130	C23	C34	255	336
M20x2.5	245	147	162	203				
M22x2.5	303	182	200	251				
M24x3	353	212	233	293				
M27x3	459	275	303	381				
M30x3.5	561	337	370	466				
M36x4	817	490	539	678				

A490M Bolt Characteristics

Nominal Bolt Dia & Thread Pitch	Stress Area, mm^2	Proof Load, kN: Length Measurement Method	Proof Load, kN: Yeild Strength Method	Tensile Strength min, kN		Product Hardness: HRC Rockwell C min	Product Hardness: HRC Rockwell C max	Product Hardness: HV (Vickers) min	Product Hardness: HV (Vickers) max	Surface Hardness: HR 30N (Rockwell 30N) Max
M16x2	157	130	148	163	188	33	39	327	336	59
M20x2.5	245	203	230	255	294					
M22x2.5	303	251	285	315	364					
M24x3	353	293	332	367	424					
M27x3	459	381	431	477	551					
M30x3.5	561	466	327	583	673					
M36x4	817	678	768	580	980					

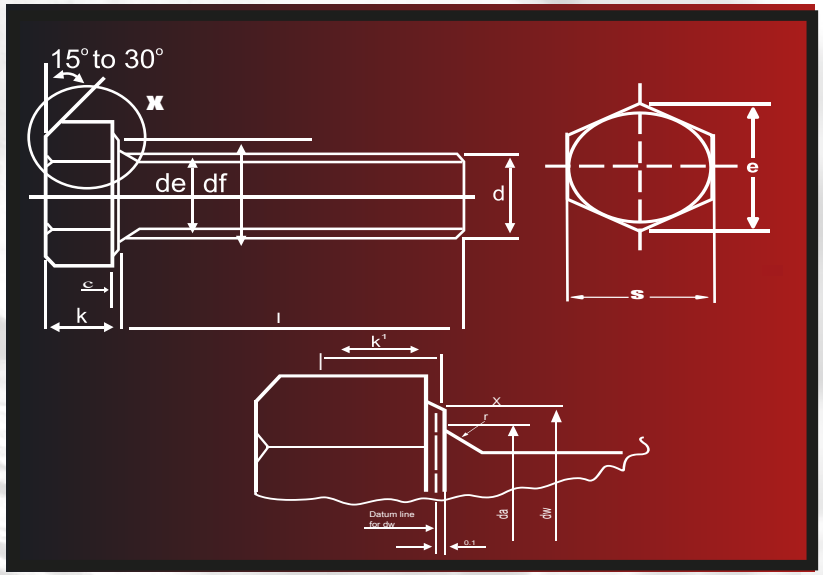

ANSI B18.2.3.7M	Heavy hex structural bolt dimensions							
D	S		E		K		B(Ref)	
	Width across flats		Width across corners		Head height		Thread length	
Nominal Size and Thread Pitch	Max.	Min.	Max.	Min.	Max.	Min.	Bolt Length ≤ 100	Bolt Length > 100
							Basic	
M16x2	27.00	26.16	31.18	29.56	10.75	9.25	31	38
M20x2.5	34.00	33.00	39.26	37.29	13.40	11.60	36	43
M22x2.5	36.00	35.00	41.57	39.55	14.90	13.10	38	45
M24x3	41.00	40.00	47.34	45.20	15.90	14.10	41	48
M27x3	46.00	45.00	53.12	50.85	17.90	16.10	44	51
M30x3.5	50.00	49.00	57.74	55.37	19.75	17.65	49	56
M36x4	60.00	58.80	69.28	66.44	23.55	21.45	56	63

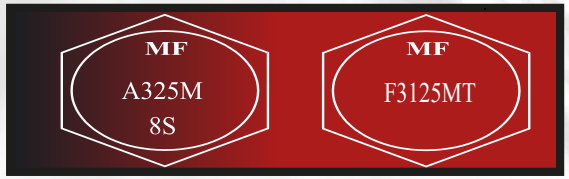

Note: it is requirment of ASTM F32125M/A325M - A490M standard that the Bolt Nut & Washer should be assembled and supplied by one manufacturer who shall be responsible for the furction of the assembly. All the components are identified with the manucaturer ID. Coating of the fasteners shall be as per standard. For any further detail and specification follow the original ASTM data.